MFG INDUSTRIES

Benco

Articulated 4X4 Tow Tractors for Transit Authorities

TT-100 M

TT- 60 M

www.vtcmfg.com

info@vtcmfg.com

TT-60M, TT-100M SPECIFICATIONS

DIMENSIONS:

Length:.....TT-60; TT-100 = 137" (3480mm)
Width:..... ...60" (1524mm)
Height:.....85" (2159mm)
Wheelbase: .....59" (1499mm)
Ground clearance:.....10" (254mm)
Operating weight:...
TT-60 = 8,200 lbs (3720 kg)
TT-100 = 11,000 lbs (5000 kg)
Turning radius:.....10.5' (3.2m)
Frame thickness:.....1/2" (12.7mm)
Gradeability:.....27%

ENGINE:

Make:.....Kubota V3600-E,
Type:.....4 cylinder, 4 stroke, liquid cooled, diesel fuel
Horsepower:.....66.8 ghp (49.8kW) @ 2600 rpm
Combustion type :.....direct (Interim TIER 4)
Engine size:.....220,9 in. cu. (3.6L)

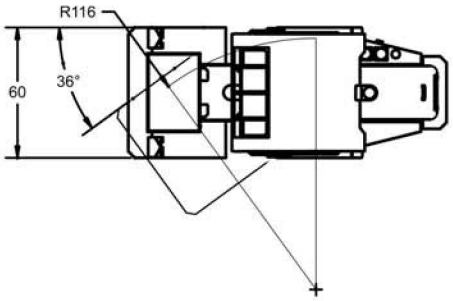

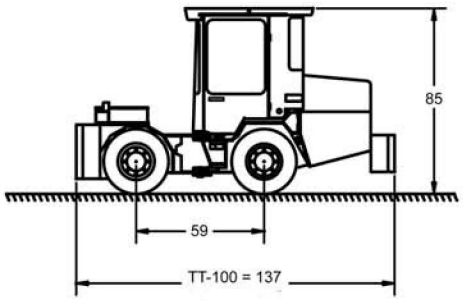

TOWING CAPACITY:

Max. drawbar pull:...
TT-60; TT-100 = 7300 lbf (32.5 kN)

Max. trailer weight:...
TT-60 = 60,000 lbs (27,215 kg)
TT-100 = 100,000 lbs (45,360 kg)

SERVICE CAPACITIES:

Fuel capacity:.....17 US gal. (64 L)
Hydraulic oil capacity:.....17 US gal. (64 L)

STEERING AND BRAKES:

Articulated frame:.....orbitrol assisted power steering
Service brake:.....front axle, wet discs

TIRES:

Standard:.....10x16.5 (tubless), 10 ply
***Other models available depending on the type of use.**

SPECIAL FEATURES & OPTIONS

* Hydraulic Air Compressor
  - Air Flow up to 60 CFM at 175 PSI
  - With 50 feet of air line of 1/2" id, mounted on reel.
  - Air coopling to client std.
* Tool Box.
* Rubber Bumpers.

TRANSMISSION :

Type :.....hydrostatic, 4 wheel drive
Torque:...784 lbf*po./100 psi (1.28 Nm / bar)
Differential:.....45% limited slip
Rear oscillation:.....+ / - 10%
Static axle load:.....19800 lbs (9000 da N)
Dynamic axle load:.....9900 lbs (4500 da N)
Transfer case:.....planetary gear
Travel speed (1st):.....07 mph (10 km/hr)
Travel speed (2nd):.....16 mph (25 km/hr)

CAB:

- ROPS canopy or soundproof enclosed cab.
- 2 or 3 point seat belt.
- Front and rear windshield wipers .
- Front windshield washer.
- Reflective strips.
- Telescopic & Tilt Steering.
- Cab heater with adjustable vents for
- Front windshield defrost.
- Lateral sliding windows.
- Back up alarm and horn.
- Rotating Beacon.
- 12V 90 Amp. alternator.
- 2 head lights and 2 tail lights, with guards.
- 4 front and rear worklights.

CAB OPTIONS:

- Mechanical or Air suspension seat (optional).
- Passenger seat (optional)
- 12" mirrors for tow hitch visibility (optional).
- AM/FM/Aux radio (optional).
- Air conditioning (optional).
- And Others.

www.vtcmfg.com

VTC MFG Industries Inc.
2430 Principale East, St-Paul-d'Abbotsford, Quebec, Canada, J0E 1A0
Phone: (450) 379-5387 Fax: (450) 379-5587